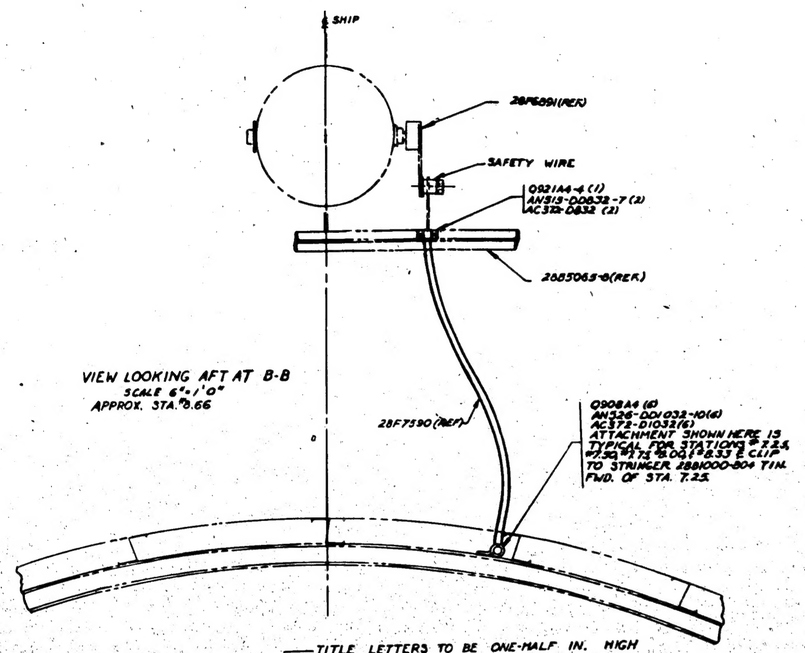

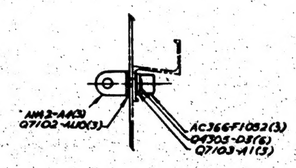

SECT. C-C
SCALE 12"=1'0"
THRU STRINGER APPROX. 22 1/2 EACH SIDE OF AIRPLANE, MEASURED ON CONTOUR. ALSO AT STA 7.5 ON ℄ OF AIRPLANE.

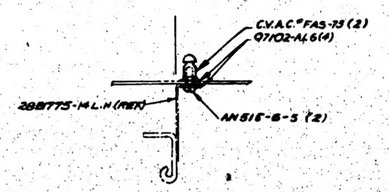

SECTION D
SCALE 12"=1'0"
LOCATED 4" EACH SIDE OF ℄ OF AIRPLANE MEASURED ALONG CONTOUR

TITLE LETTERS TO BE ONE-HALF IN. HIGH

STENCIL ON BLKHD BELOW 28F6795 IN BLACK LETTERS ONE-QUARTER INCH HIGH THE FOLLOWING:-

OPERATION OF ANTI-ICER HEATER

1. TURN ON MAIN DISTRIBUTION ANTI-ICER SWITCH
2. OPEN FUEL VALVE IN MECHANICS COMPARTMENT
3. PULL DAMPER OUT TO FOURTH NOTCH
4. TURN ON ANTI-ICER SWITCH AT BULKHEAD #7

CAUTION- DAMPER MUST BE CLOSED DURING TAKEOFFS AND LANDINGS AND OPEN TO FOURTH NOTCH DURING OPERATION OF HEATER.

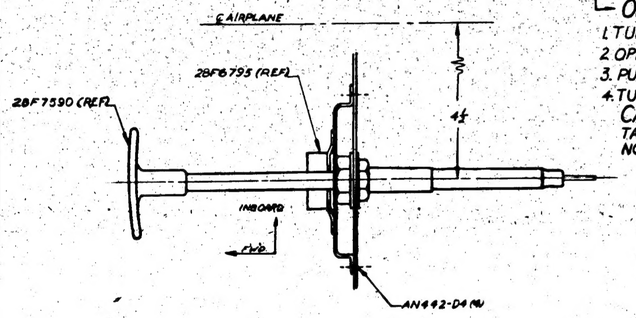

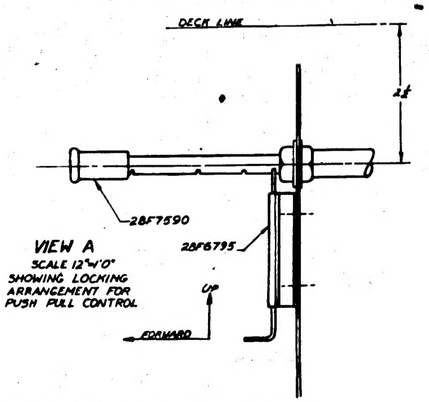

VIEW A
SCALE 12"=1'0"
SHOWING LOCKING ARRANGEMENT FOR PUSH PULL CONTROL

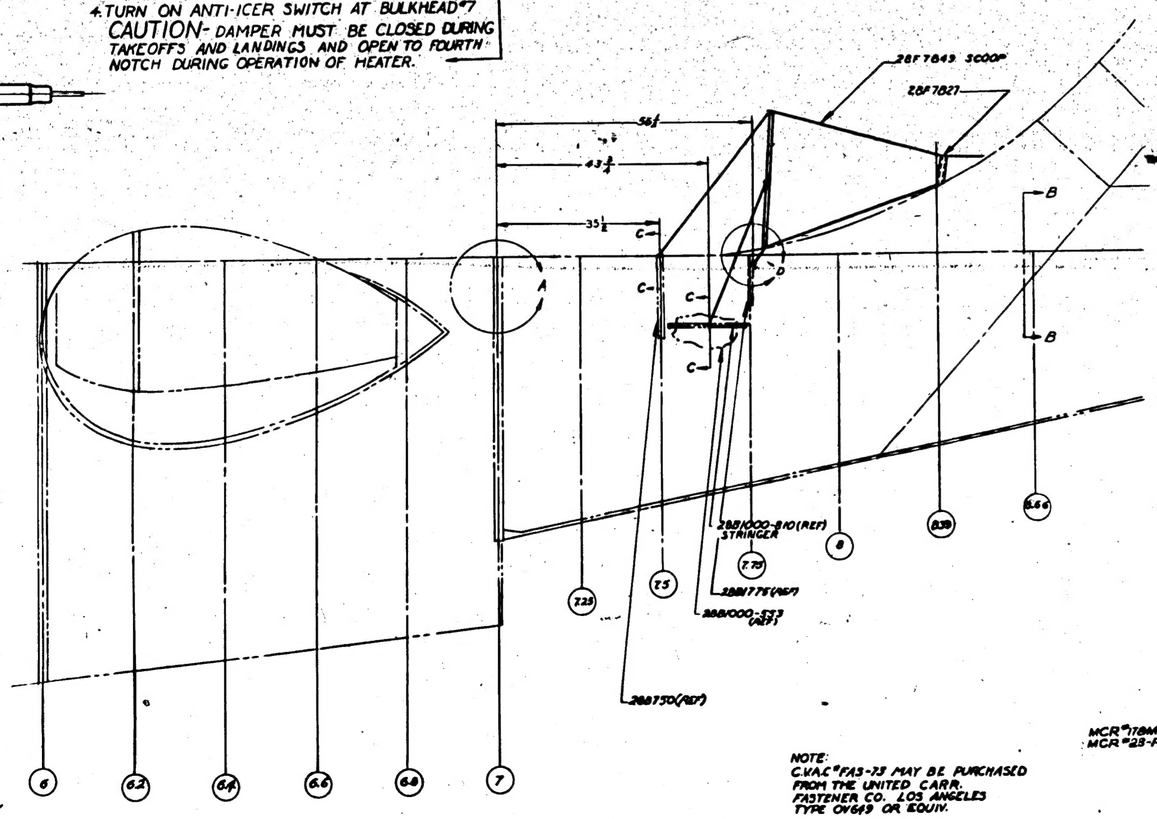

STENCIL ON BLKD. AT LEFT SIDE OF 28F6795 IN BLACK LETTERS ONE-QUARTER-INCH HIGH THE FOLLOWING:—

-RELATIVE DAMPER POSITIONS-

CONTROL IN AT FIRST NOTCH (CLOSED) - NO AIR SUPPLY
CONTROL OUT TO SECOND NOTCH - 1/3 AIR SUPPLY
CONTROL OUT TO THIRD NOTCH - 2/3 AIR SUPPLY
CONTROL OUT TO FOURTH NOTCH - FULL AIR SUPPLY

NOTE:
C.V.A.C. FAS-73 MAY BE PURCHASED FROM THE UNITED CARR. FASTENER CO. LOS ANGELES TYPE OV649 OR EQUIV.

MCR #178M-4 & ON
MCR #23-R4 & ON

APPROVED FOR TOOLING BY
J. Howard
4/2/48

LIST	ALTERATIONS	DATE	BY	LIST	ALTERATIONS	DATE	BY

PART NO.	STOCK	MATERIAL	SPEC.	LIST REQ'D -0	LIST REQ'D -2	LIST REQ'D -3	LIST REQ'D -4	LIST REQ'D -5
C.V.A.C. FAS-73				2				
Q7102-A1				3				
Q7102-AU0				3				
Q7102-AL6				4				
Q4303-08								
Q921-A4				6				
Q908-A4								
AC372-D1032				6				
AC372-D832				2				
AC366-F1032				3				
AN526-D0V032-10				6				
AN519-D0832-7				2				
AN42-A1								
AN42-AA								
AN442-D4				4				
28F7827				1				
28F7849				1				
28F7590				1				
28F6795				1				
28F6591				1				

PARTS LIST PER ASSY.

A.C.				
MATL NONE	NONE			
HEAT TREAT	FINISH	DRAFT	DESIGN	STRUCT

NAME INSTALL.-FURNS.-DAMPER CONTROL & AIR SCOOP

SIZE J | NO. 28F7597 | SCALE NONE

H 421

28F7597 R